MAIN DATA:

THE SHIP TO BE REGISTERED IN _ _ _ _ xx
CERTIFICATE _ _ _ _ _ _ _ _ _ _ _ _ MED
IMO REG. NUMBER _ _ _ _ _ _ _ _ _ _ xx
YARD/OWNER _ _ _ _ _ _ _ _ _ _ _ _ _ xx / xx

DAVIT MAIN DATA:

PROTOTYPE APPROVED LOAD _ _ _ _ _ _ W=7000 Kg
APPROX. TOTAL WEIGHT OF ONE SET OF DAVITS W/ WINCH (EXCLUSIVE LIFEBOAT) _ _ _ _ _ _ 4500 kg *
* Excl. windlass foundation and boarding platform

LIFEBOAT SPECIFICATION:

MAKER: _ _ _ UMOE SCHAT-HARDING A/S
TYPE _ _ _ _ _ _ _ _ _ _ _ _ _ _ _ _ 22TECB
WEIGHT OF BOAT WITH EQUIPMENT (WE) _ _ 3060 Kg
WEIGHT OF PERSONS (30) _ _ _ _ _ _ _ 2250 Kg
TOTAL LOWERING WEIGHT (WT) _ _ _ _ _ 5310 Kg
MAX HOISTING WEIGHT (WH) _ _ _ _ _ _ 3285 Kg

MAIN DIMENSIONS (loa x bow x h) 8800 x2350 x 2850 mm

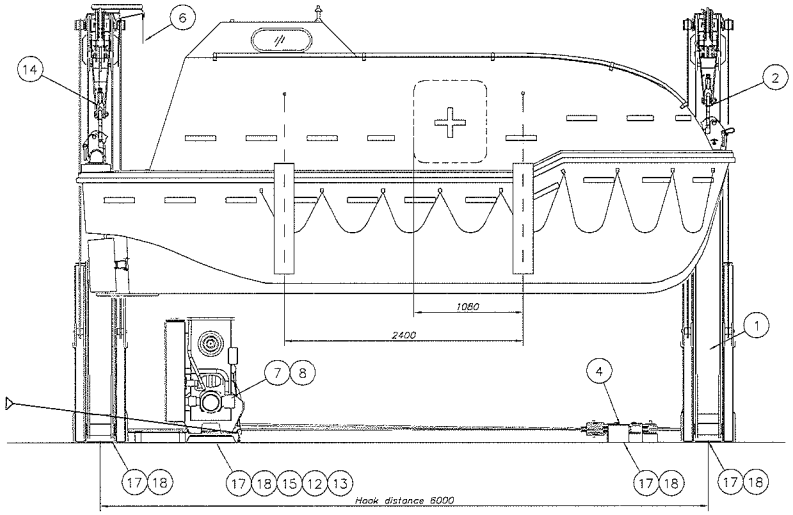

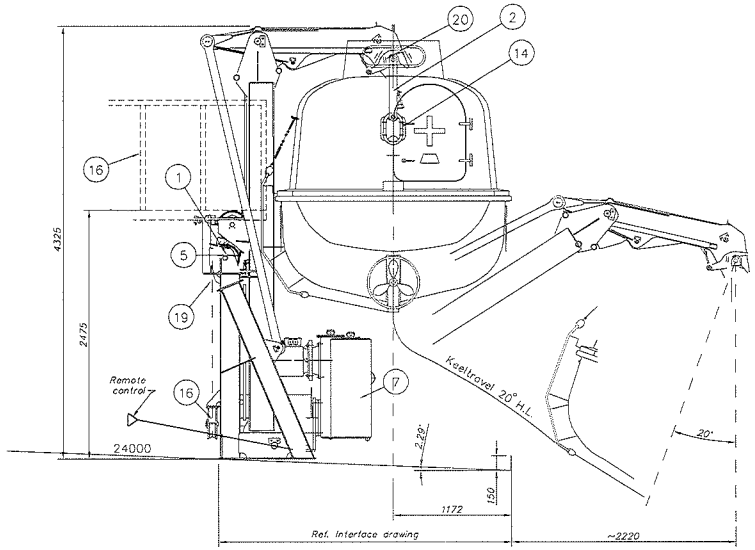

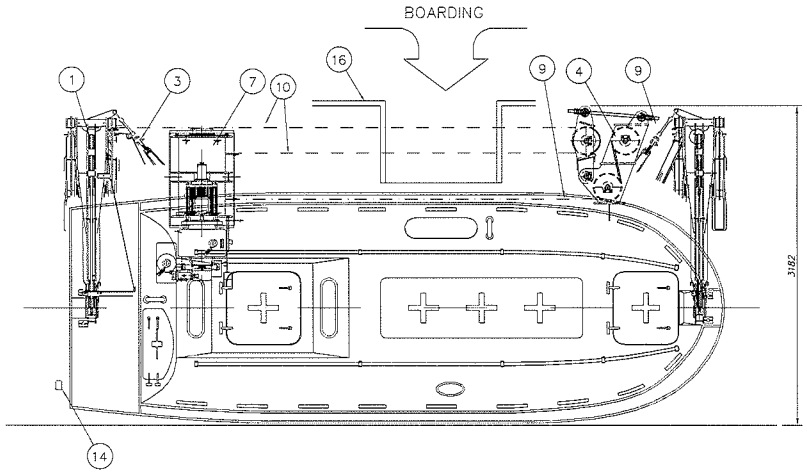

○ = Equipment delivered with certificate.
X = Yard supply. Not included in standard delivery from UMOE SCHAT-HARDING AS

NOTE!
See item 17 & 18 for dimensions and reaction forces.

	SWL min.KN	BL min.KN	TL min.KN	Item no.	Quantity	Description	Material	Art. no.	Remarks	kg.pr. unit
○				20	1	HANGING OFF	SET	NB3209		
				19	2	Safety pin		N94064		
				18	1	Footprint and reactionforces		N73716		
				17	1	Interface drawing		N65736		
X				16		Boarding platform				
				15	1	Winch foundation		NB3964		
				14	1	Link Aft		NE0411		
				13	8	Hex nut M30	Galv 8	0230.06359	DIN934	
				12	4	Hex head screw M30x90	Galv 8.8	0202.42309	DIN931	
				11						
○	34.3	205.8		10	1	Fall wire aft Notor HP Ø18 L= 50m		0170.20529		
○	34.3	205.8		9	1	Fall wire forw Notor HP Ø18 L= 47m		0170.20529		
				8	1	El. diagram		2054081-N73332		
○	See winch doc.			7	1	Winch W 80 R		NB3194		
				6	1	Remote control arr.		NB3321		
				5	2	Limit switch arr.		N83637		
				4	1	Adjustable sheavehouse		N65537		
				3	1	Lashing arrangement		NB3357		
○	34.3	205.8	85.8	2	1	Link Forward		N94088		
○	* 34.3	* 154.5	* 75.5	1	2	Davit assembly		NB3292		

* Each davitstand

Rev	Mark	Description	Date	Sign.
G		Nozzlt pers. corrected	23.11.05	JP Ust MB
F		Drawing on checked	03.10.05	JP NG MB
E		NEW ITEM 6	31.08.05	JP Ust MB
D		BUSH FOUND	12.07.05	Ust MB
C		Amended	04.07.05	Ust MB
B		Gearing 150mm	26.04.05	JP Ust MB
A		Start position 2.P. Foster	01.04.05	JP Ust MB

Approved by: JP
Checked by: Ust
Date, sign.: 2.P. Foster

This drawing is the property of Umoe Schat-Harding As. It may not be copied, altered or made available to others without our written permission.

Date: 01.03.05 | Name: JP | Projection | Checked: LH | Approved: MB | Scale: 1:25

SCHAT HARDING

VIP700/22TECB/W80R
General Arrangement
Samsung 1556/57

Reference: N65673 A | Calculation

Replacement for: | Replaced by:

NB3080 G