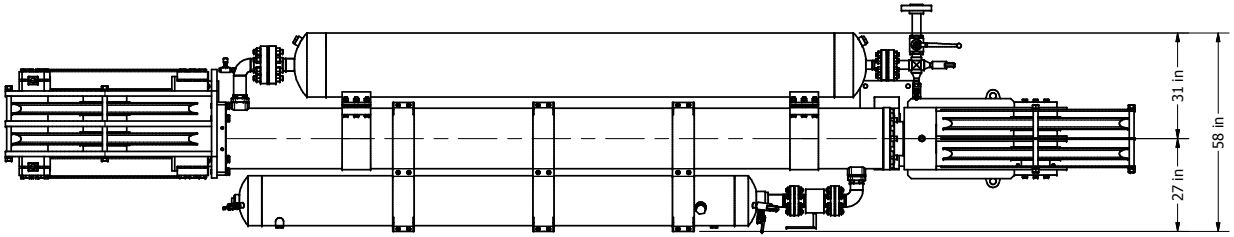
31 in
58 in
27 in

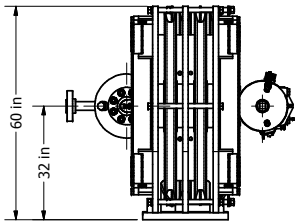
60 in
32 in

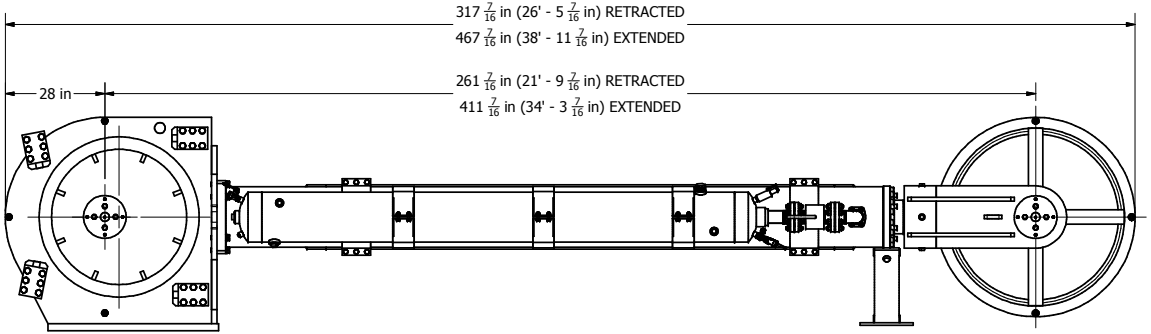
317 7/16 in (26' - 5 7/16 in) RETRACTED
467 7/16 in (38' - 11 7/16 in) EXTENDED
28 in
261 7/16 in (21' - 9 7/16 in) RETRACTED
411 7/16 in (34' - 3 7/16 in) EXTENDED

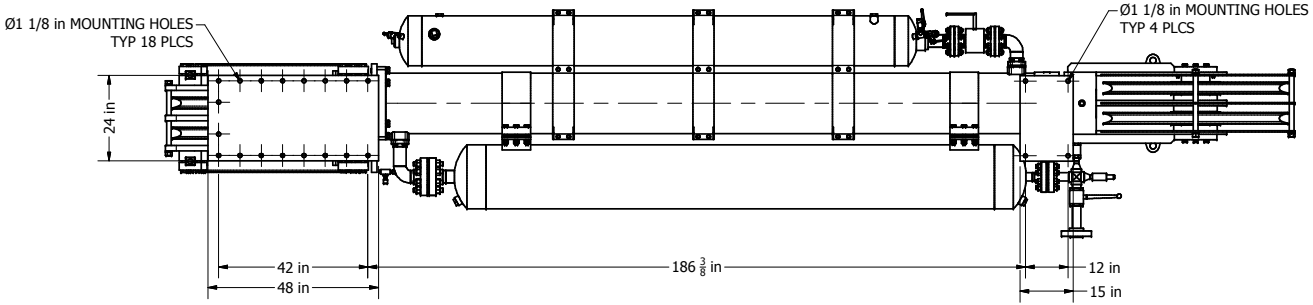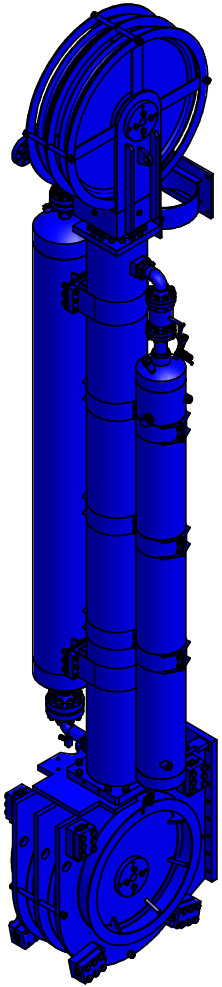
Ø1 1/8 in MOUNTING HOLES
TYP 18 PLCS
Ø1 1/8 in MOUNTING HOLES
TYP 4 PLCS
24 in
42 in
48 in
186 3/8 in
12 in
15 in